Electrolux PROFESSIONAL

Eco Preparation 1200 mm Soaking Sink for Dishwasher with 1 Bowl - Left drain

ITEM #

MODEL #

NAME #

SIS #

AIA #

132933 (ESBD1217L) Sink Unit for Dishwasher with 1 bowl left hand drainer 500x500, 1200mm

Short Form Specification

Item No.

Worktop in 304 AISI stainless steel with front edge h=40mm. Rear upstand h=100mm. N.1 bowl 500x500mm. Front and side covering panels in stainless steel. Rear panel in stainless steel. Square section legs 40x40mm in stainless steel with adjustable feet. An undercounter dishwasher can be placed under the drainer.

APPROVAL:

Main Features

- Sturdiness, stability and reliability of table accurately tested.

Construction

- Constructed entirely in stainless steel to offer maximum durability.
- Bottom part of drain left free to house an undercounter dishwasher.
- Delivered in knock-down package.
- Wide range of taps are available to suit every need.
- Drainage area suitable for drying operations

Optional Accessories

- Set of 4 wheels (2 with brake) d. 100mm for tables and sinks (total height on wheels= 993 mm) PNC 855150 ❑
- Single plastic drain syphon 1,5 " for work tables with bowl PNC 855306 ❑
- Elbow operated mixer tap with spout 3/4", single hole PNC 855322 ❑
- Elbow operated mixer tap with short spout 3/4", single hole PNC 855323 ❑
- Maxi reel rectractable hose spray unit, 6m PNC 855327 ❑
- Foot operated mixer tap (hot and cold) with spout 3/4" PNC 855328 ❑

Eco Preparation
1200 mm Soaking Sink for Dishwasher with 1 Bowl - Left drain

Front

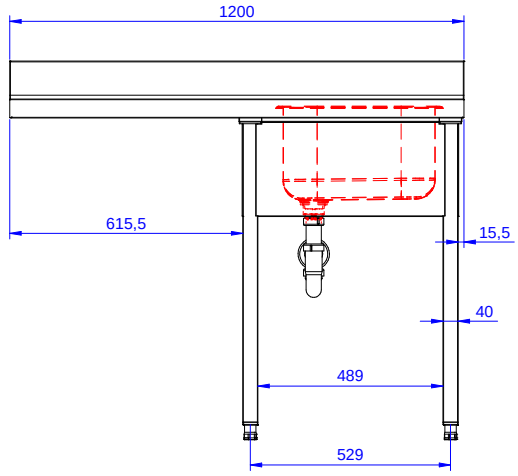

Side

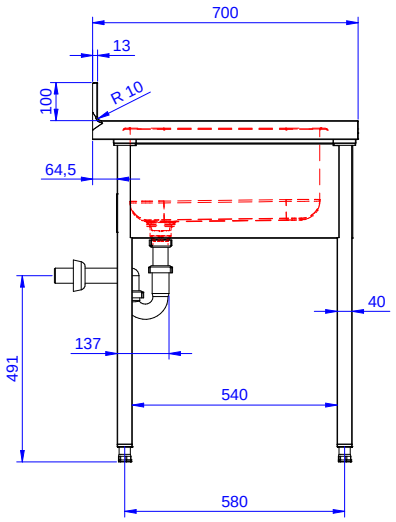

D = Drain

Top

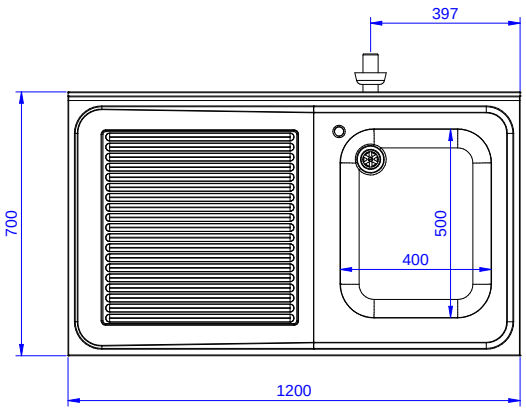

Key Information:

External dimensions, Width:	
132933 (ESBD1217L)	1200 mm
External dimensions, Depth:	700 mm
External dimensions, Height:	900 mm
Upstand Dimensions, Height:	100 mm
Upstand Dimensions, Depth:	13 mm
Upstand Dimensions, Radius:	R=10
Bowls number	1
Bowl dimensions	400X500XH250
Net weight:	32 kg

The company reserves the right to make modifications to the products without prior notice. All information correct at time of printing.